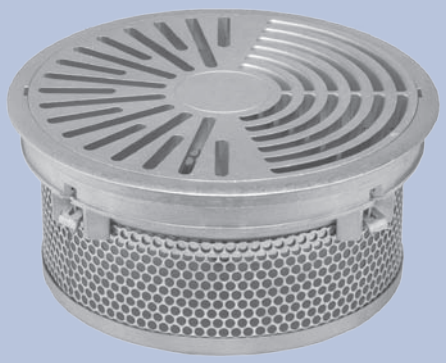

Krantz

Rotary floor twist outlet DB-D....

Air distribution systems

DS 4074 E 05.2015

Rotary floor twist outlet

Construction design

Preliminary remarks

Floor twist outlets from Krantz discharge supply air with a vertical jet axis from bottom up into the room. If the client wishes individual adjustment of discharged air in the near-zone of the seating area, e.g. at office workplaces, this is easy to do with the rotary floor twist outlet. Its jet axis is inclined at about 30° to the vertical. The jet direction can be individually adjusted by manual rotation of the twist element.
The air outlet is intended for installation in conventional raised floor systems.

Construction design

The rotary floor twist outlet consists of the circular air outlet element **1** with radial slots **1a** and circular slots **1b**. It is available in the sizes DN 125 and DN 200. It is installed with the help of a clamp insert **5** in the through bore of the raised floor. The DN 200 air outlet element can be locked against unauthorized removal. Up to four DN 125 air outlets and one DN 200 air outlet can be inserted in floor tiles measuring 500 mm x 500 mm or 600 mm x 600 mm.

Figure 1: Rotary floor twist outlet with distributor basket and clamp insert
Left: DN 125 with rotary claw
Right: DN 200 with clamp collar

The clamp insert has a protective collar **6** on the top which functions as edging for the tile cutout around the air outlet. This option is useful for raised floors with carpeting. The clamp insert can be fastened to the floor,
– for size DN 200 with an optional clamp nut **5a**, claw fastener **5b** or clamp collar **5d** [1],
– for size DN 125 with rotary claw **5c**.

Instead of using the clamp insert, the DN 200 air outlet element can be inserted in a stepped bore **9b**.
The rotary floor twist outlet is delivered with a distributor basket **2** for even air supply.

[1] For the required air outlet type (kind, size, material) or possible combination of individual components see page 9 'Types available'

For size **DN 200** there are different types of distributor basket to choose from (Figure 2) [1]:
- 'Standard type', with throttle device: VSD (without throttle device: VS)
- 'Short type' for raised floors with lower plenums, without throttle device: VK
- 'Low type' with openable basket bottom enabling additional air supply from below, best for raised floors with thicker tiles and lower plenums, with throttle device: VND (without throttle device: VN)
- 'Perforated sheet metal type' for floor air outlets made of aluminium, with throttle device: VPD
- 'Short type with fixed damper' for even supply air distribution when using DN 200 in assembly rooms or with low air outlet volume flow rates: VL

For size **DN 125**
- 'Distributor insert' with throttle device: VD

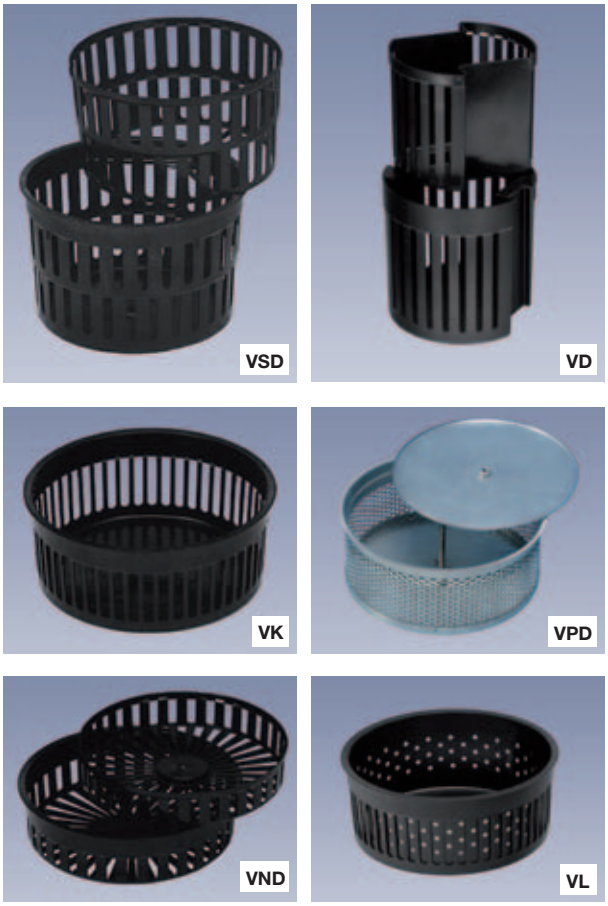

Figure 2: Various types of distributor basket

The air can be supplied directly from the pressurized plenum below the floor or via a connection box with flexible duct.

Key for all pages:

1	Air outlet element	**4**	Seal (on site)	**6**	Protective collar
1a	Radial air slots	**5**	Clamp insert	**7**	Connection box
1b	Circular air slots	**5a**	Clamp nut	**8**	Connection spigot
1c	Marking of main jet axis	**5b**	Claw fastener	**9**	Floor tile
2	Distributor basket	**5c**	Rotary claw	**9a**	Through bore
3	Throttle device	**5d**	Clamp collar	**9b**	Stepped bore

Rotary floor twist outlet made of plastic

Dimensions

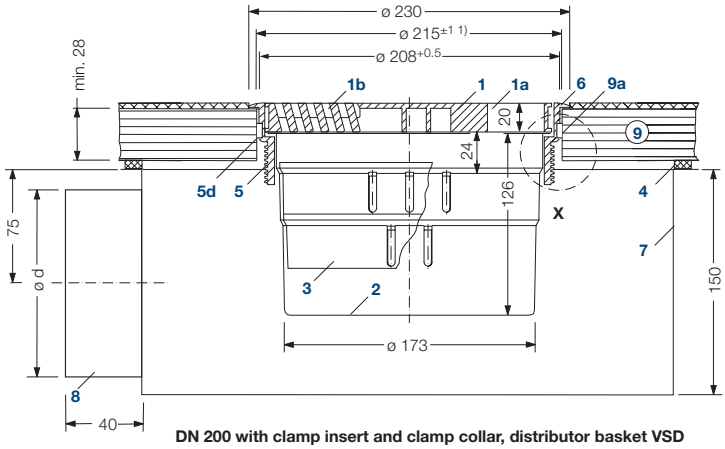

DN 200 with clamp insert and clamp collar, distributor basket VSD

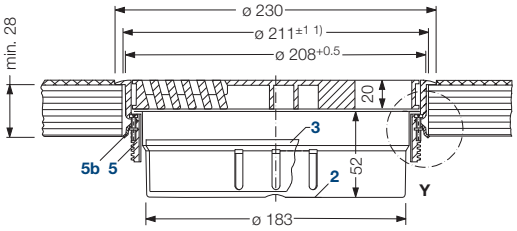

DN 200 with clamp insert and claw fastener, distributor basket VND

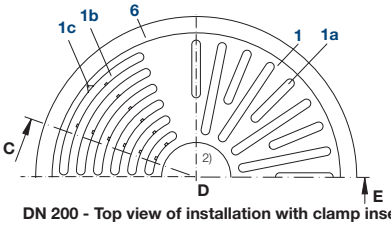

DN 200 - Top view of installation with clamp insert

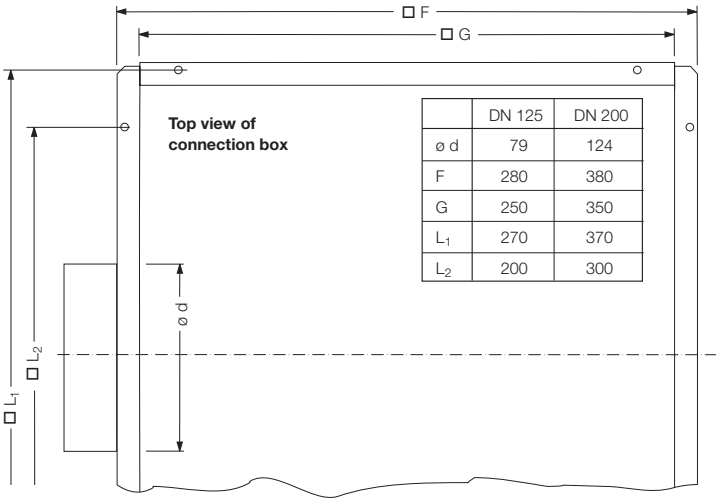

	DN 125	DN 200
ø d	79	124
F	280	380
G	250	350
L_1	270	370
L_2	200	300

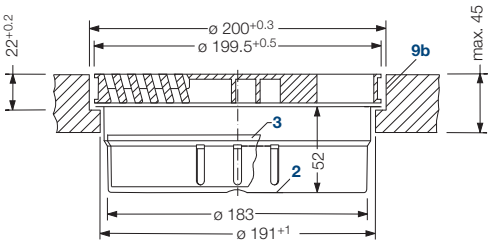

DN 200 installation in stepped bore, distributor basket VND

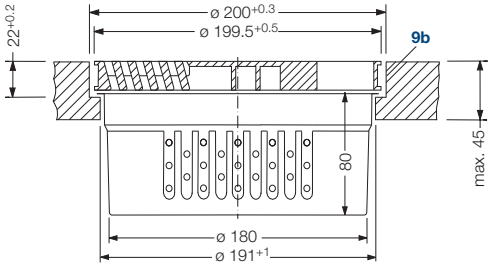

DN 200 installation in stepped bore, distributor basket VL

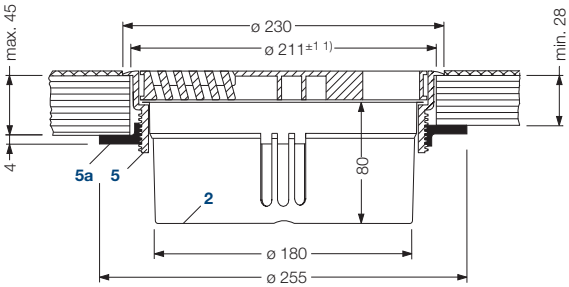

DN 200 with clamp insert and clamp nut, distributor basket VK

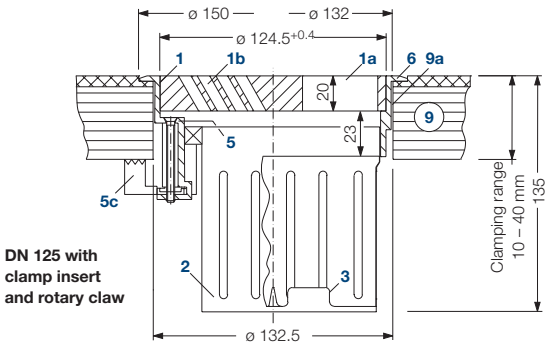

DN 125 with clamp insert and rotary claw

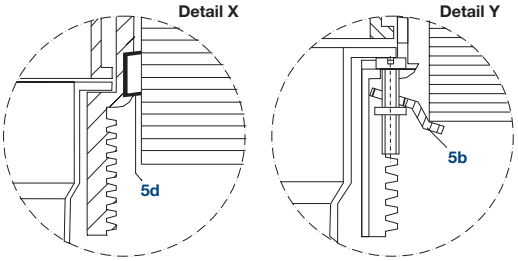

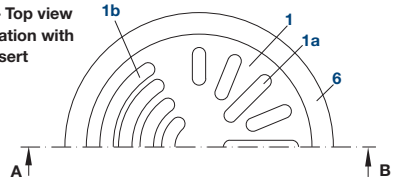

DN 125 – Top view of installation with clamp insert

1) ø 211±1 for fastening with clamp nut or claw fastener,
ø 215±1 for fastening with clamp collar

2) Client's logo or other marking can be put here on request

Note: Any distributor basket can be used for the respective installation options. Likewise connection box **7** can be used for the air outlet layout in the other figures.

Rotary floor twist outlet made of aluminium

Dimensions

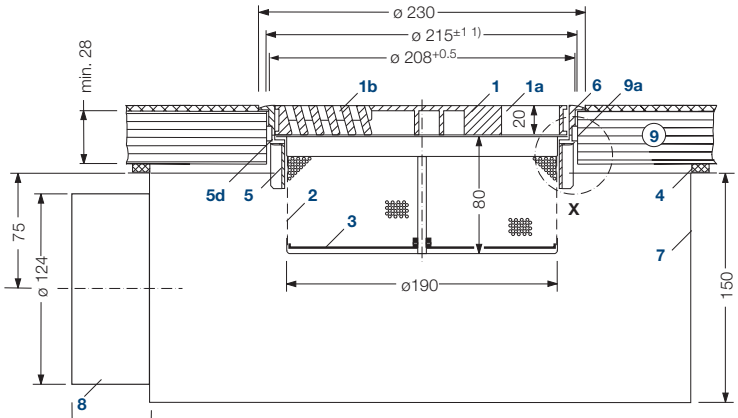

DN 200 with clamp insert and clamp collar, distributor basket VPD

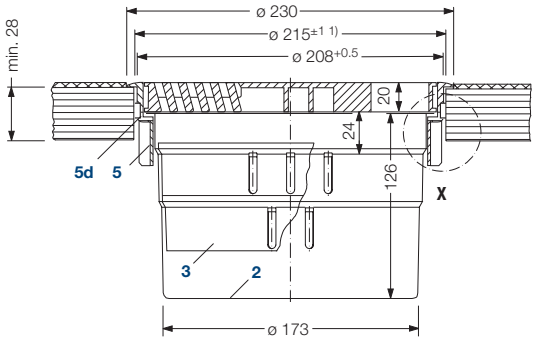

DN 200 with clamp insert and clamp collar, distributor basket VSD

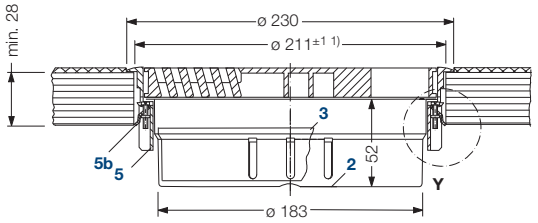

DN 200 with clamp insert and claw fastener, distributor basket VND

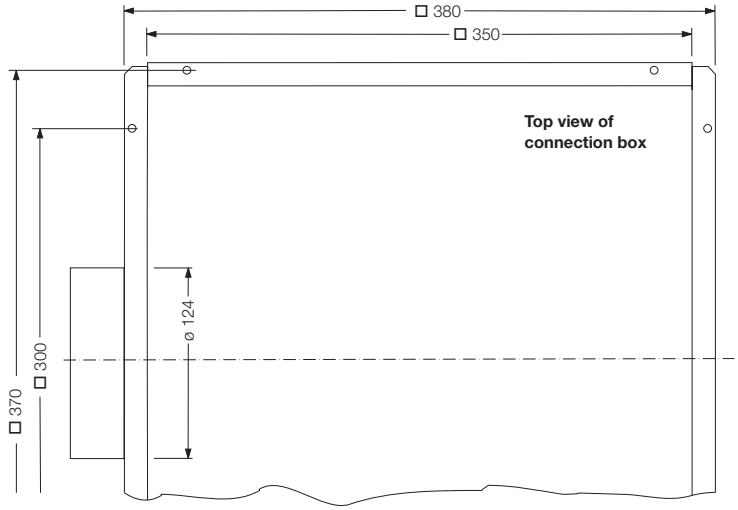

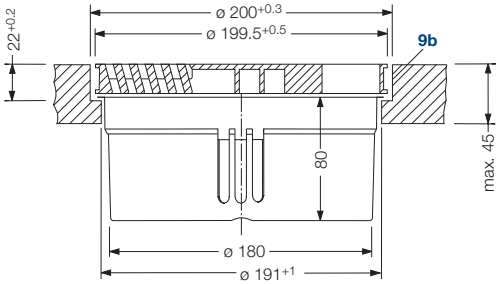

DN 200 installation in stepped bore, distributor basket VK

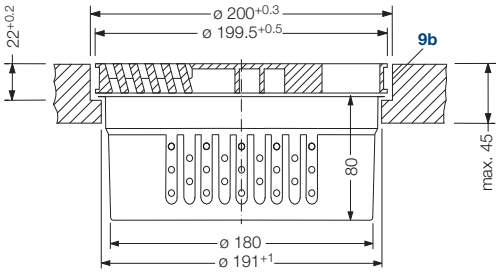

DN 200 installation in stepped bore, distributor basket VL

DN 200 – Top view of installation with clamp insert

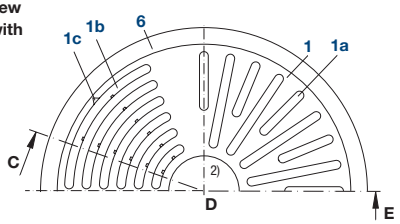

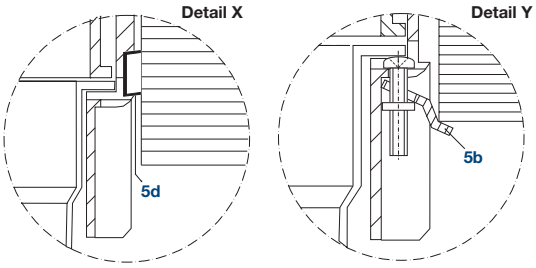

DN 200 – Top view of installation in stepped bore

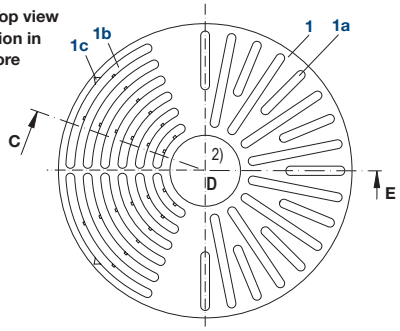

1) ø 211±1 for fastening with clamp nut or claw fastener, ø 215±1 for fastening with clamp collar

2) Client's logo or other marking can be put here on request

Note: Any distributor basket can be used for the respective installation options. Likewise connection box **7** can be used for the air outlet layout in the other figures.

Rotary floor twist outlet

Mode of operation

Mode of operation

The air slots **1a** and **1b** of the rotary floor twist outlet are inclined to the vertical. The selected slot inclination and the various slot shapes result in an air jet incline of about 30° to the vertical. Jet direction can be individually adjusted by manual rotation of the air outlet element.

Figure 3: Jet pattern for different settings, shown for size DN 200

The rotary floor twist outlet produces high-turbulence twisted supply air jets with intensive induction of indoor air. The heat and material loads in the room are very effectively removed from the occupied zone with the help of buoyancy forces and conveyed to the ceiling.

A turbulent mixing air upflow is produced. Ventilation effectiveness is equivalent to that achieved with displacement ventilation. The vertical temperature gradient, however, is significantly smaller than with displacement ventilation. Even with high specific indoor cooling loads (up to 100 W/m^2), the vertical temperature gradient in the occupied zone is ≤ 2 K/m.

The high induction effect of the twisted supply air jets results in a rapid drop in jet velocity and fast equalization of supply air temperature and room temperature.

Due to the angle of inclination of the jet axis of about 30° to the vertical, air velocities at head height of a person seated near the air outlet can be altered by turning the outlet (see Figure 3), namely for size **DN 125:**
- with 1 air outlet per floor tile,
  from < 0.1 m/s to about 0.3 m/s,
- with 4 air outlets per floor tile,
  from < 0.1 m/s to about 0.55 m/s,

for size **DN 200:**
- with 1 air outlet per floor tile,
  from < 0.1 m/s to about 0.4 m/s.

Air temperature can be altered by maximum 1 K. It is therefore possible to individually adjust the intensity of the indoor air flow in the near-zone of the occupants from a fresh breeze to the absence of draughts with air velocities < 0.1 m/s.

These specifications are based on extensive measurements also taken for DN 125 in 4 rotary positions (Figure 4). Figure 6 shows the air jet patterns for these 4 rotary positions made visible by smoke tracer.
For rotary positions 1 and 4, for example, the air velocity curves are shown in Figure 5.

For size DN 200 (1 air outlet per floor tile) Figure 7 shows the velocity curve in the main jet axis. The main jet direction is indicated by a marking on the surface of the air outlet.

Rotary floor twist outlet

Air velocities

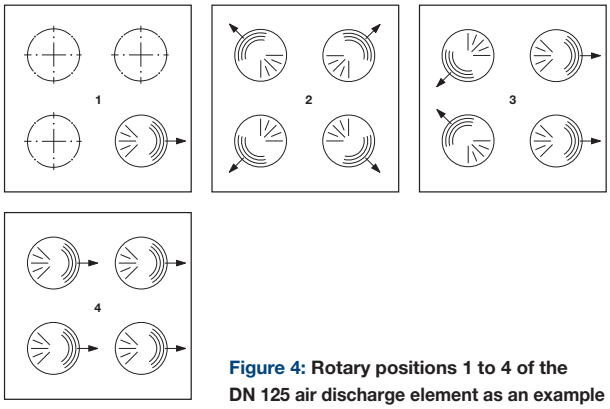

Figure 4: Rotary positions 1 to 4 of the DN 125 air discharge element as an example

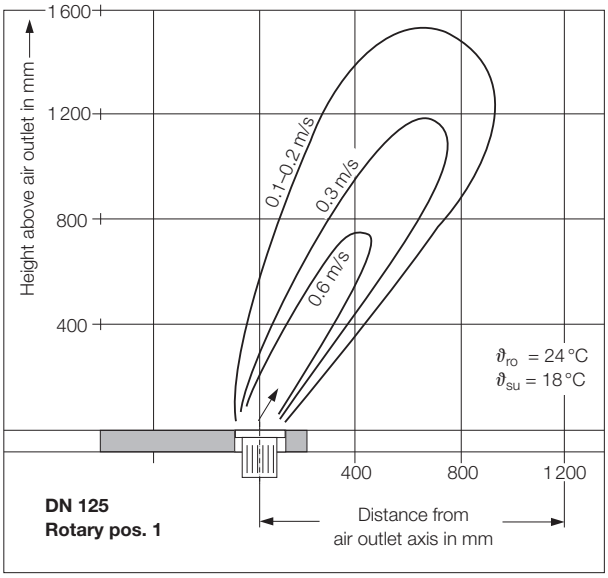

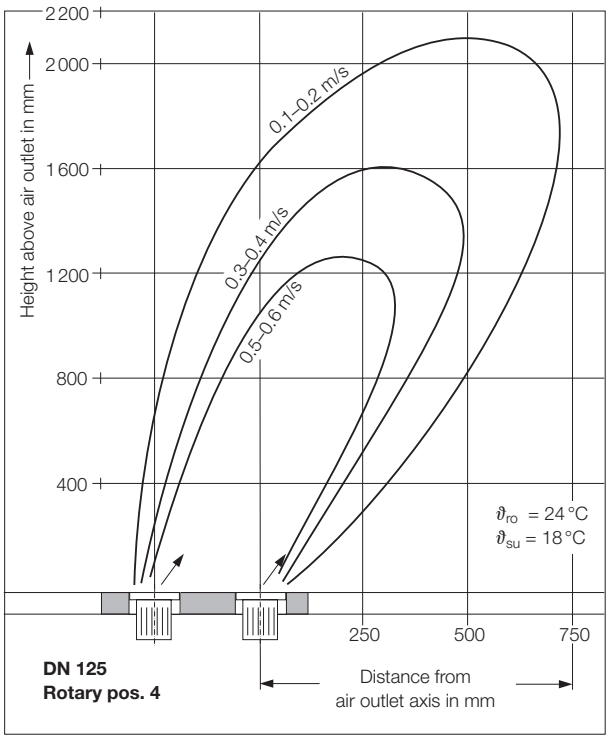

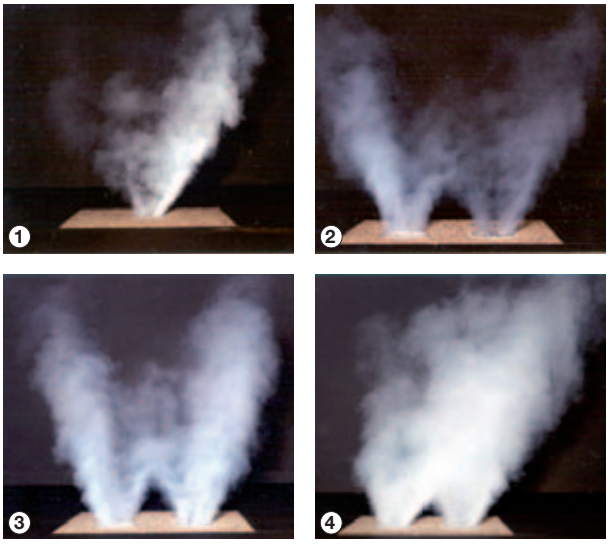

Figure 6: Air jet patterns for rotary positions 1 to 4 made visible by smoke tracer

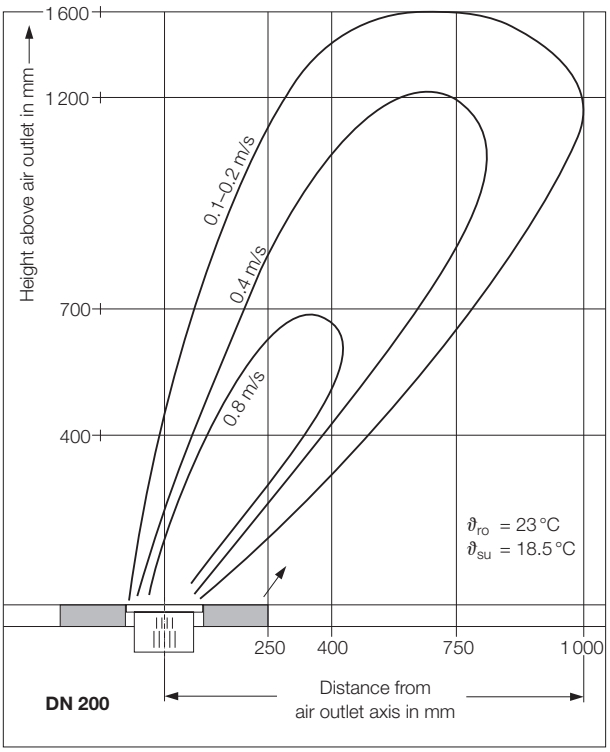

Figure 7: Air velocities for DN 200 in the main jet axis, volume flow rate 42 l/s [150 m³/h]

←

Figure 5: Jet velocity curves for DN 125, rotary positions 1 and 4, volume flow rate 14 l/s [50 m³/h] per air outlet

Rotary floor twist outlet

Layout specifications

Sound power level and pressure drop [1]

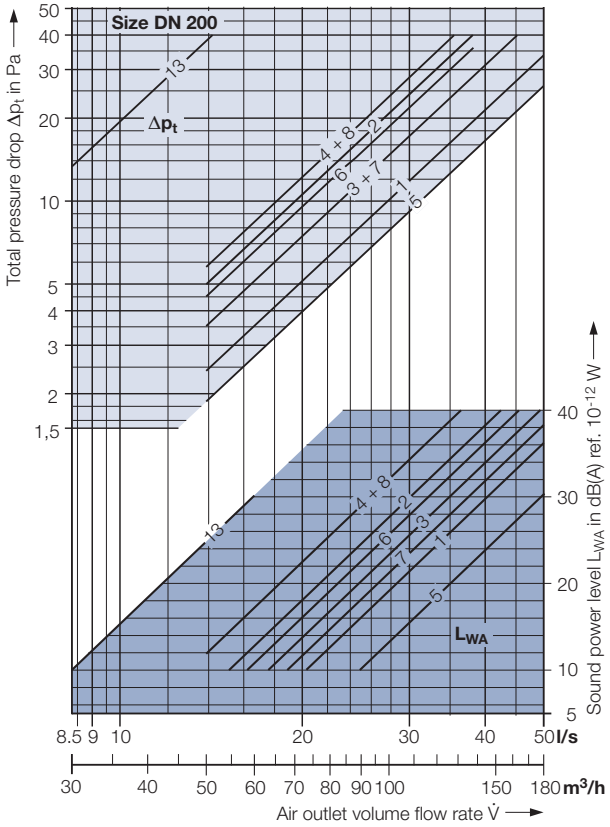

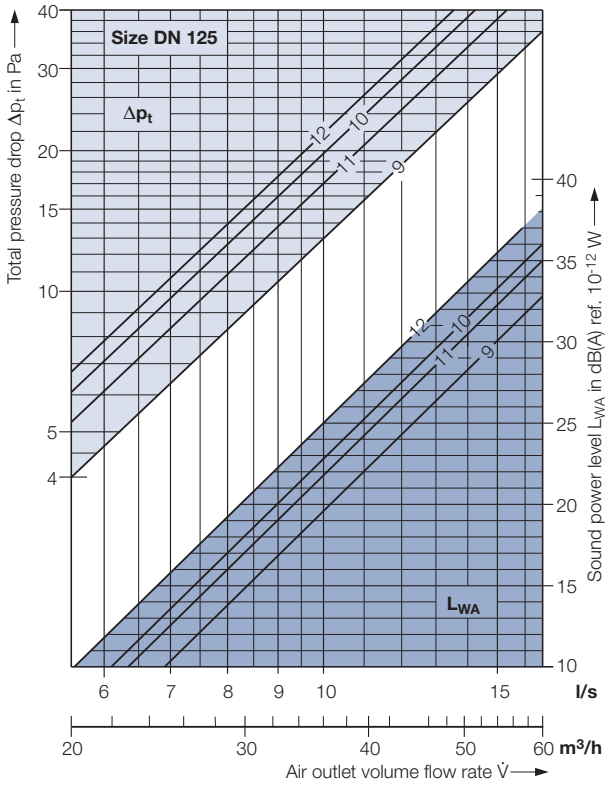

Key to graphs

No.	Size	Type	Distributor basket: Throttle device [2] % open	Distributor basket: Aperture width / Disc lift mm	Connection box
1	DN 200	VSD	100	8	without
2			50	4	without
3			100	8	with
4			50	4	with
5	DN 200	VPD	100	45.0	without
6			50	22.5	without
7			100	45.0	with
8			50	22.5	with
9	DN 125	VD	100	5.0	without
10			50	2.5	without
11			100	5.0	with
12			50	2.5	with
13	DN 200	VL	without throttle device		without

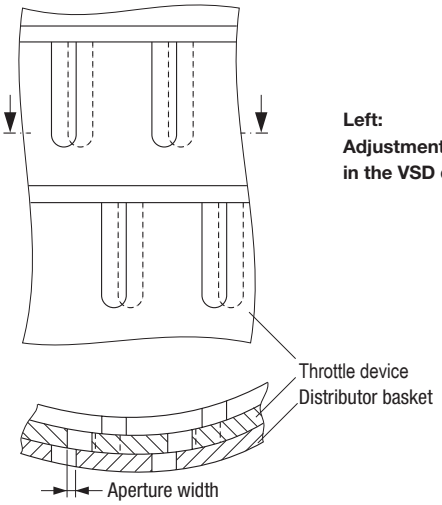

Left:
Adjustment of throttle device in the VSD distributor basket

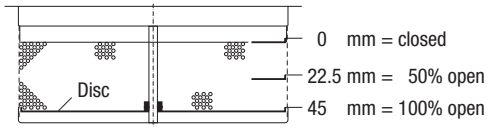

Adjustment of throttle device (disc) in the VPD distributor basket

[1] The sound power level and pressure drop pertain to the use of the VSD, VPD, VD and VL distributor baskets. When using VK and VND distributor baskets, the values approximate those for the VSD distributor basket.

[2] The throttle devices in the distributor baskets enable continuous volume flow reduction, preferably up to 50% as well as full shutoff

Rotary floor twist outlet

Sound power level and pressure drop

No.	Air outlet volume flow rate $\dot{V}_A$		Total pressure drop Δp_t	Sound power level in dB ref. 10^{-12} W							
				L_{WA}	Octave band centre frequency in Hz						
	l/s	m³/h	Pa	dB(A)	63	125	250	500	1 K	2 K	4 K
DN 200 with distributor basket **VSD**											
1	25	90	8	16	27	19	19	14	11	—	—
	33	120	15	24	35	27	27	22	19	11	—
	42	150	23	31	42	34	34	29	26	18	—
	50	180	34	36	47	39	39	34	31	23	11
2	25	90	17	24	28	24	25	22	20	12	—
	33	120	30	33	37	33	34	31	29	21	11
	42	150	48	39	43	39	40	37	35	27	17
3	25	90	12	20	17	24	23	18	15	—	—
	33	120	21	29	26	33	32	27	24	14	—
	42	150	34	35	32	39	38	33	30	20	10
	50	180	49	40	37	44	43	38	35	25	15
4	25	90	19	29	19	25	29	25	27	17	—
	33	120	35	37	27	33	37	33	35	25	16
	42	150	55	44	34	40	44	40	42	32	23
DN 200 with distributor basket **VPD**											
5	25	90	7	10	19	13	12	—	—	—	—
	33	120	11	18	27	21	20	16	13	—	—
	42	150	18	25	34	28	27	23	20	11	—
	50	180	26	30	39	33	32	28	25	16	—
6	25	90	15	23	26	18	17	15	19	18	—
	33	120	27	31	34	26	25	23	27	26	12
	42	150	43	37	40	32	31	29	33	32	18
7	25	90	12	18	17	20	20	16	14	—	—
	33	120	21	26	25	28	28	24	22	13	—
	42	150	34	33	32	35	35	31	29	20	—
	50	180	49	38	37	40	40	36	34	25	14
8	25	90	19	29	22	27	27	23	25	23	15
	33	120	35	37	30	35	35	31	33	31	23
	42	150	55	44	37	42	42	38	40	38	30
DN 125 with distributor basket **VD**											
9	8	30	9	15	22	17	18	14	—	—	—
	11	40	16	22	29	24	25	21	16	—	—
	14	50	25	28	35	30	31	27	22	15	—
10	8	30	14	18	26	20	21	16	12	—	—
	11	40	24	26	34	28	29	24	20	13	—
	14	50	38	32	41	35	36	31	27	20	10
11	8	30	12	17	17	21	21	14	12	—	—
	11	40	21	25	25	29	29	22	20	11	—
	14	50	33	31	31	35	35	28	26	17	—
12	8	30	15	20	14	22	22	16	17	—	—
	11	40	27	28	22	30	30	24	25	15	—
	14	50	42	34	28	36	36	30	31	21	10
DN 200 with distributor basket **VL**											
13	8	30	13	10	—	—	—	—	—	—	—
	10	35	17	14	12	13	10	12	10	—	—
	11	40	22	18	16	17	14	16	14	—	—

Transmission loss in dB								
Size	Octave band centre frequency in Hz							Mean value
	125	250	500	1 K	2 K	4 K	8 K	
DN 125	21	16	9	6	4	5	3	9
DN 200	16	11	6	3	4	3	1	6
DN 125	19	15	12	9	5	4	2	9
DN 200	13	11	8	3	2	3	2	6

without connection box with connection box

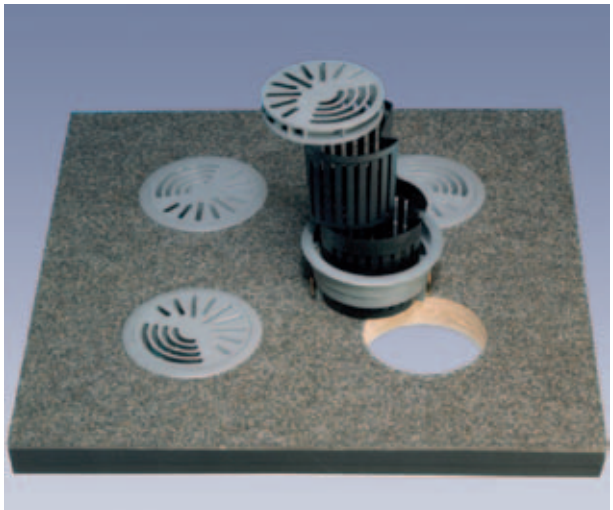

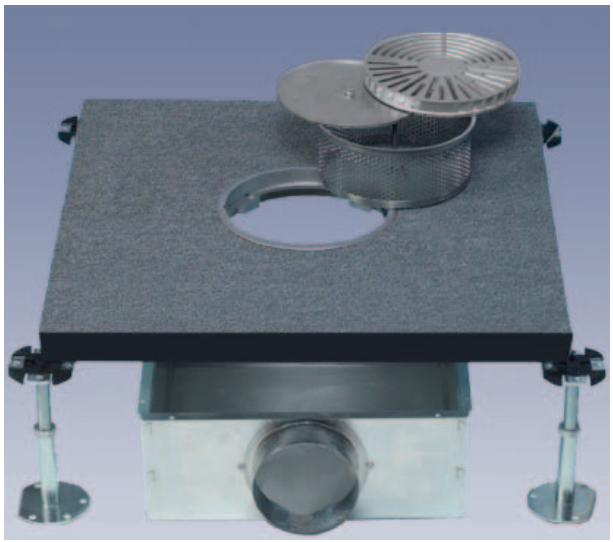

Figure 8: Rotary floor twist outlet with clamp insert for installation in through bore of floor tile
Top: 4 DN 125 air outlets with VD distributor basket
Centre: 1 DN 200 air outlet with VPD distributor basket and connection box
Bottom: Installed DN 200 air outlet

Rotary floor twist outlet

Data, types available, features

Technical data

Nominal diameter		DN 125	DN 200	
Air volume flow rate	l/s	5.5 – 16.5	14 – 50	
	m^3/h	20 – 60	50 – 180	
When room is occupied, max.	l/s	14	42	
	m^3/h	50	150	
Max. temperature difference supply air to return air	K	± 10		
Supply air temperature	°C	18 – 30		
Max. load-bearing capacity [1]	kN	5.5	6.7	20
Twist element made of		PC	PC	Al
For tile size		Air outlets per tile, max.		
500 x 500 mm	units	4	1	
600 x 600 mm	units	4	1	
Min. air outlet centre spacing	m	approx. 0.25	approx. 0.6	
Min. distance between seat and air outlet	m	approx. 0.5	approx. 0.5	

[1] Load category to EN 13264: 'heavy'; point load applied centrally with a steel cube with 25 mm edge length and 2 mm corner radius

Types available

Rotary floor twist outlet		Size					
		DN 125			DN 200		
Component		Material [1]					
		PC	Al	St	PC	Al	St
Twist element		•			•	•	
For installation in through bore: Clamp insert							
– with clamp collar	SR				• [2]	• [3]	
– with claw fastener	SK				• [2]	• [3]	
– with clamp nut	SM				• [2]		
– with rotary claw	SD	•					
For installation in through bore and stepped bore: Distributor basket							
– Distributor insert with throttle device	VD	•					
– Standard type	VS				•		
with throttle device	VSD				•		
– Short type	VK				•		
– Low type	VN				•		
with throttle device	VND				•		
– Perforated sheet metal type with throttle device	VPD						•
– Short type with fixed damper	VL				•		
Connection box				•			•

[1] PC = polycarbonate; Al = aluminium; St = galvanized sheet metal
[2] Standard lock
[3] Optional lock

• = available

Features

- Floor twist outlet with 30° jet axis incline to the vertical
- For turbulent mixing ventilation in commercial applications
- Installation in conventional raised floor systems
- Air supply direct from the pressurized plenum or via connection box with flexible duct
- Supply air flow in direction of buoyancy forces, from floor to ceiling
- Intensive mixing of supply air with indoor air
- High ventilation effectiveness
- Air velocity adjustable in near-zone of air outlet by rotating air outlet element: from absence of draughts (velocity < 0.1 m/s) to fresh breeze (velocity 0.3 - 0.55 m/s)
- Jet temperature at 1.2 m height max. 1 K below mean room temperature
- Max. temperature difference supply air to return air ±10 K
- Minimum supply air temperature 18 °C
- Low sound power level
- Minimum distance between air outlet and seat approx. 0.5 m
- Air volume flow rate
  – for DN 125: 5.5 – 16.5 l/s [20 – 60 m^3/h]
  – for DN 200: 14 – 50 l/s [50 – 180 m^3/h]
- Floor installation by insertion in a stepped bore or installation with clamp insert in through bore of floor tile
- Fastening of clamp insert to floor tile either with clamp collar or claw fastener for DN 200, also with clamp nut for the plastic option; with rotary claw for DN 125
- Twist element and clamp insert made of polycarbonate, for DN 200 also of aluminium; connection box made of galvanized sheet metal
- The DN 200 twist element can be locked against unauthorized removal, this lock is
  – standard if clamp insert is made of polycarbonate,
  – optional if clamp insert is made of aluminium
- Different distributor baskets made of polycarbonate, with or without throttle device; one distributor basket type made of galvanized sheet metal available for DN 200
- Distributor basket 'short type with fixed damper' available for low volume flow rates for DN 200 use in assembly rooms
- In centre of DN 200 air outlet, blank surface for client's logo
- Can be walked over, driven over and can support a wheelchair

Rotary floor twist outlet

Type code and tender text

Type code

DB-D __ – DN___ – __ __ – __ – __

Floor twist outlet | Material | Size | Distributor basket | Damper | Clamp insert | Connection type

Material	DN 125	DN 200
K = plastic	•	•
A = aluminium		•

Size
125 = DN 125
200 = DN 200

Distributor basket	DN 125	DN 200
VD = distributor insert with throttle device	•	
VS = standard type		•
VK = short type		•
VN = low type		•
VP = perforated sheet metal type		• [1]
VL = short type with fixed damper		•

Damper/Throttle device	DN 125	DN 200
O = none		•
D = with throttle device		•

Clamp insert	DN 125	DN 200
SD = rotary claw	•	
SO = no clamp insert		•
SM = clamp nut		• [2]
SK = claw fastener		•
SR = clamp ring		•

Connection type
P = pressurized floor plenum
K = connection box

Tender text

..... units
Rotary floor twist outlet for floor installation with high induction effect in floor zone, thus quick decrease in jet velocity and intensive energy exchange with ambient air;
air jet axis approx. at 30° incline to the vertical and rotatable air outlet element for individual adjustment of air jet direction or air flow intensity at workplace;
air outlet can be walked over, driven over and can support a wheel chair;

consisting of:
– circular twist element with radial and circular slots and textured surface,

for **DN 125:**
→ Distributor insert with slots including throttle device for reduction of supply air flow rate as required
– with clamp insert for installation in through bore of floor tile, with rotary claw.

for **DN 200**, different options of distributor basket:
→ Standard distributor basket with slots and optional throttle device for reduction of supply air flow rate as required.
→ Short distributor basket with slots for raised floors with lower plenums, without throttle device.
→ Low distributor basket with slots and openable bottom, best for raised floors with thicker tiles and lower plenums, with optional throttle device for reduction of supply air flow rate as required.
→ Perforated sheet metal distributor basket, including throttle device for reduction of supply air flow rate as required.
→ Short type with fixed damper for even supply air distribution when used in assembly rooms or with low air outlet volume flow rates.
– with clamp insert for installation in through bore of floor tile, optionally fitted with clamp nut [2], clamp collar, or claw fastener.
– Optional connection box for connection of air outlet to a flexible duct.

Material:
– Twist element and clamp insert made of polycarbonate, body-tinted in a colour similar to RAL 7037, dust grey [3], or made of aluminium (only DN 200) in natural colour [3].
– Distributor baskets VD, VSD, VK and VND made of polycarbonate, body-tinted in a colour similar to RAL 9005, jet-black
– Distributor basket VPD made of sheet metal
– Distributor basket VL made of polycarbonate, body-tinted in a colour similar to RAL 9005, jet-black; damper made of sheet metal
– Connection box made of galvanized sheet metal.

Make: Krantz
Type: DB-D __ – DN___ – __ __ – __ – __

Subject to technical alterations.

[1] Only for aluminium outlet
[2] Only for plastic outlet
[3] Other colour on request

www.krantz.de DS 4074 E p. 10 05.2015

DS 4074 E 05.2015

Caverion Deutschland GmbH
Business unit Krantz
Uersfeld 24, 52072 Aachen, Germany
Phone: +49 241 441-1
Fax: +49 241 441-555
info.komponenten@krantz.de
www.krantz.de

A trademark of Caverion